6 - INSTALLATION

6.1 - INTRODUCTIONS

Before proceeding to the assembling of the machine components, it is necessary to carefully position the machine in the place where it must be installed.

NOTA *Read carefully all the single parts of this chapter .*
All the operations described in this chapter must be executed by specialised technicians specifically trained for the requested tasks.

In order to ease the loading-unoading operations and to avoid eventual damages, the AUTOMATIC MATTRESS ROLL-PACK MACHINE BM183 is shipped in 2 or 3 separete parts, according to the purchased components.

Ê machine main structure complete with electric cabinet, control panel and remote control panel [1];

Ë entrance rolls-conveyor or motorised-carpet conveyor [2];

***picture* 5** - PARTS OF THE MACHINE

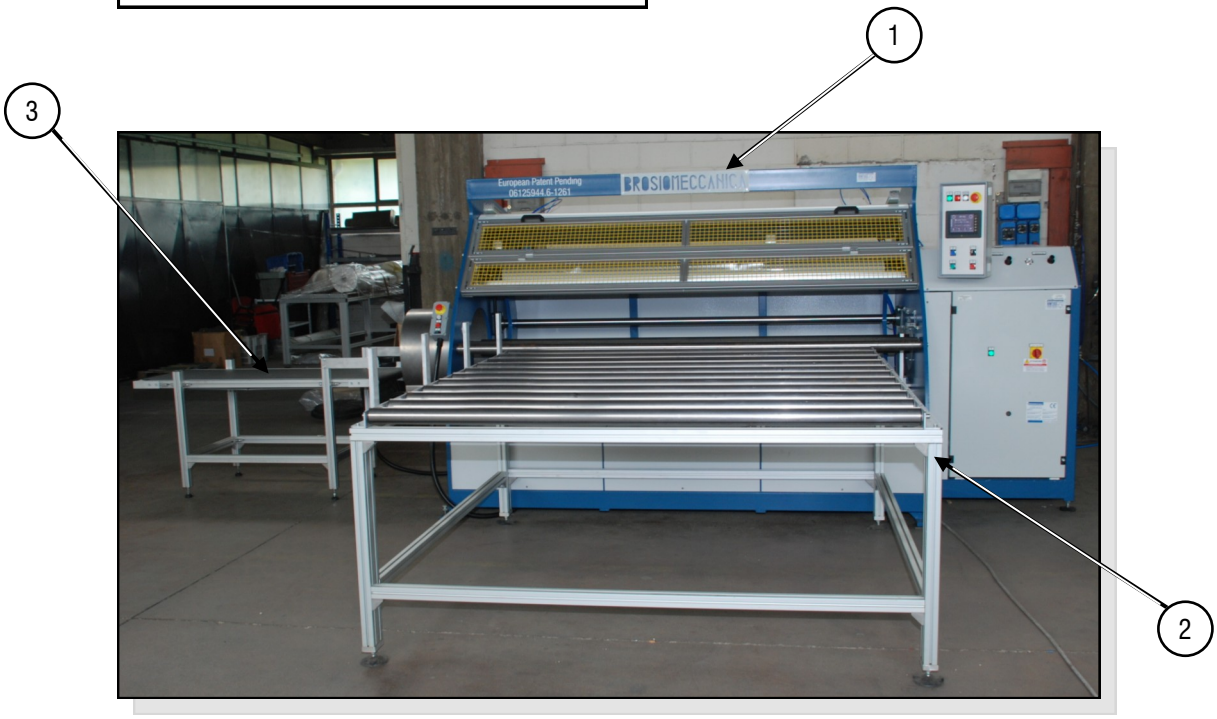

BROSIOMECCANICA costruzioni meccaniche BROSIOMECCANICA costruzioni meccaniche BROSIOMECCANICA costruzioni meccaniche BROSIOMECCANICA costruzioni meccaniche BROSIOMECCANICA costruzioni meccaniche BROSIOMECCANICA costruzioni meccaniche BROSIOMECCANICA costruzioni meccaniche BROSIOMECCANICA costruzioni meccaniche BROSIOMECCANICA costruzioni meccaniche BROSIOMECCANICA costruzioni meccaniche BROSIOMECCANICA costruzioni meccaniche BROSIOMECCANICA costruzioni meccaniche BROSIOMECCANICA costruzioni meccaniche BROSIOMECCANICA costruzioni meccaniche BROSIOMECCANICA costruzioni meccaniche BROSIOMECCANICA costruzioni meccaniche BROSIOMECCANICA costruzioni meccaniche BROSIOMECCANICA co-

PATENT PENDING PATENT PENDING PATENT PENDING PATENT PENDING

NOTA *Before proceeding with the positioning and levelling, remove the plastic protection- sheets wrapping the machine and remove from the control panel the anti-shock protection.*

IMPORTANT
The packing materials must be disposed following the current country rules (according to the type of materials)

6.2 - MACHINE LIFTING

ATTENZIONE
BEFORE PROCEEDING TO THE LIFTING OF THE MACHINE AND OF ITS COMPONENTS, MAKE SURE OF THE WEIGHT OF THE MACHINE (SEE TECHNICAL FEATURES PAGE) AND USE SUITABLE DEVICES.

In order to lift the machine it is possible to use a fork lifter or a crane and suitable ropes (or belts).

Operate as shown in Drawing 2 and proceed very carefully to the lifting .

NOTA *Balance the weight of the part to be lifted before proceeding to its lifting. Make sure that eventual movable parts are well secured or closed before lifting.*

DRAWING 5 - **main structure lifting**

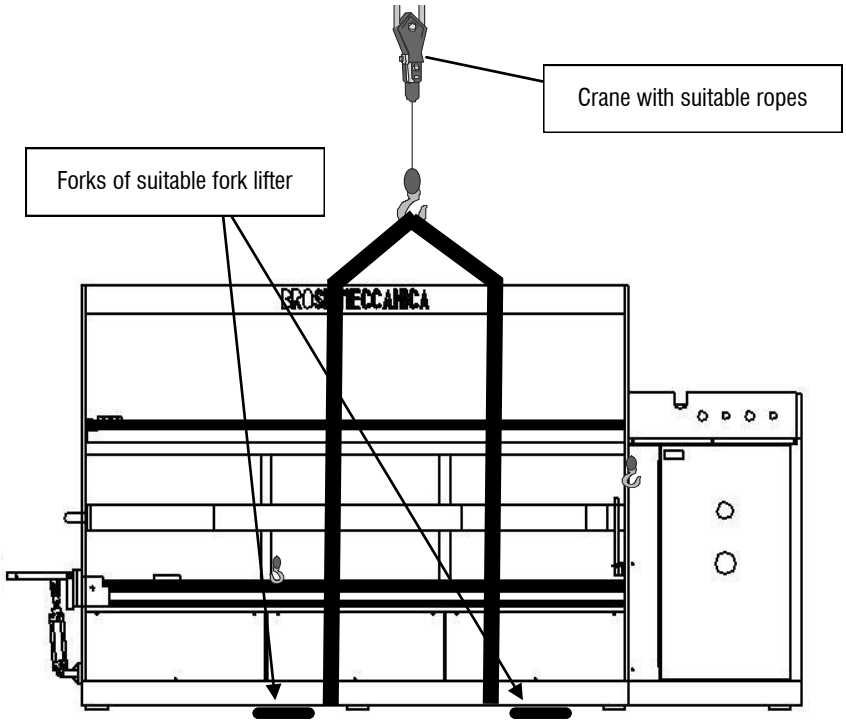

PATENT PENDING PATENT PENDING PATENT PENDING PATENT PENDING

DRAWING 6 - **Entrance rolls-conveyor or motorised-carpet conveyor lifting**

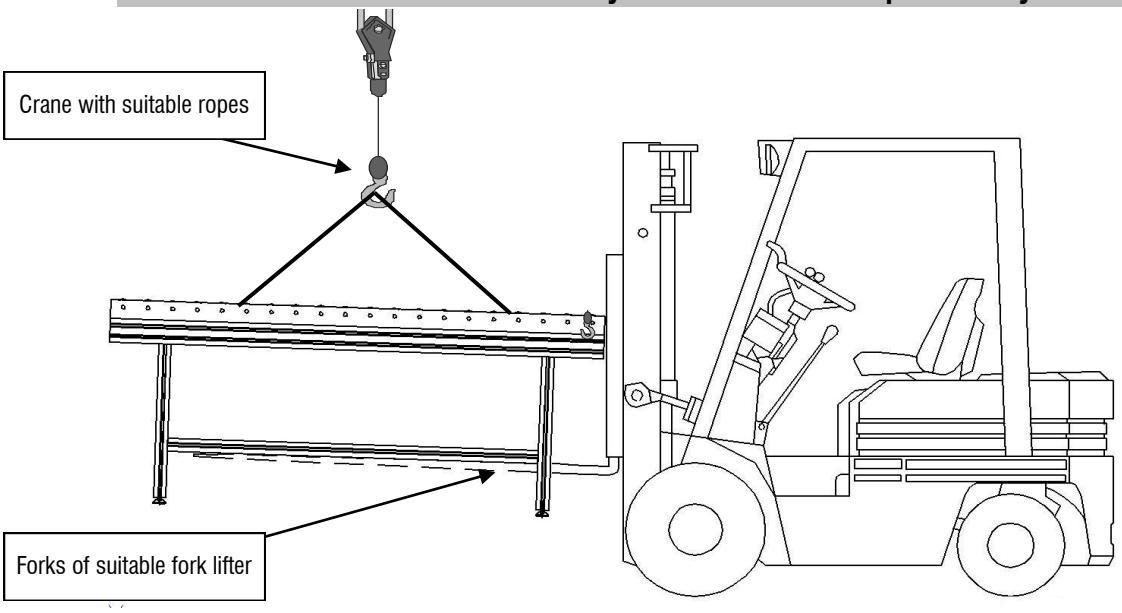

DRAWING 7 - **exit motorize-carpet lifting**

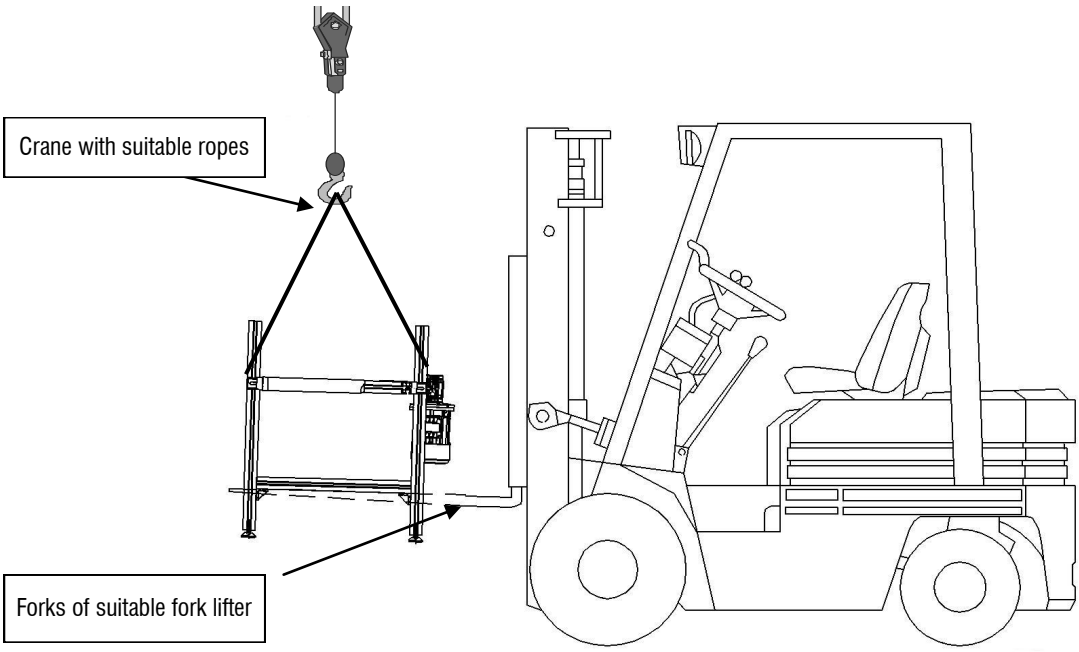

BROSIOMECCANICA costruzioni meccaniche BROSIOMECCANICA costruzioni meccaniche BROSIOMECCANICA costruzioni meccaniche

6.3 - POSITIONING AND LEVELLING

Lift the single groups (by acting as described in the present booklet) and position them in their final places (following the plan already supplied to the Customer), adjust the height and the levelling of the working surface by acting as follows:

- loosen nut [4];
- tighten or loosen levelling screws [5] of all feet until having reached the levelling of the machine;
- secure the levelling screws [5] by locking nuts [4];
- fix the structure to the existing surface with suitable screws.

NOTA *This operation is very important for the good working of the machine, therefore it should be executed by specialised technicians of the manufacturing company*

DRAWING 8 - **levelling procedure**

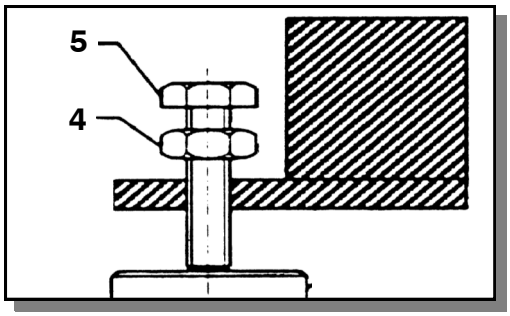

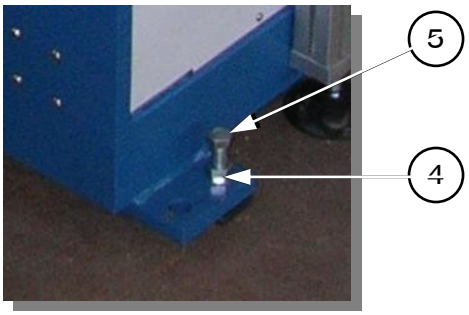

6.4- ROLLS-CONVEYORS / MOTORISED-CARPET CONVEYORS POSITIONING

After having positioned and levelled the machine in the proper place, position the entrance rolls-conveyor or motorised-carpet conveyor and the exit carpet-conveyor as follows:

- place the entrance rolls or motorised-carpet conveyor (6) in front of the machine (7), as shown in Figure 9
- in case of motorised-carpet, connect the male multiplug to the female multiplug on the machine, in case of direct connection, follow the instructions of next chapter
- place the exit motorised-conveyor (8) at the machine left side as shown in Figure 9
- connect the male multiplug to the female multiplug on the machine, in case of direct connection, follow the instructions of next charter.

BROSIOMECCANICA costruzioni meccaniche BROSIOMECCANICA costruzioni meccaniche BROSIOMECCANICA costruzioni meccaniche

DRAWING 9 - **positioning**

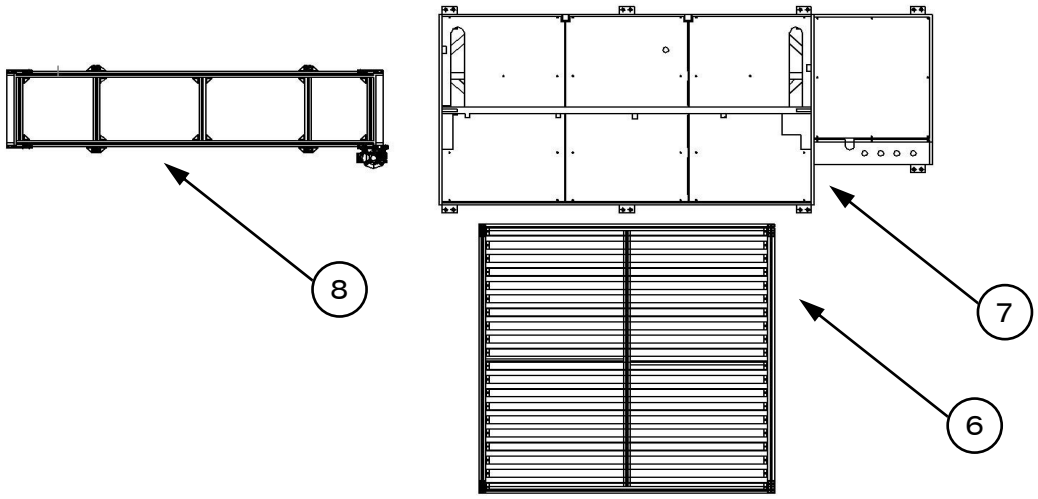

BROSIOMECCANICA costruzioni meccaniche

PATENT PENDING PATENT PENDING PATENT PENDING PATENT PENDING